A

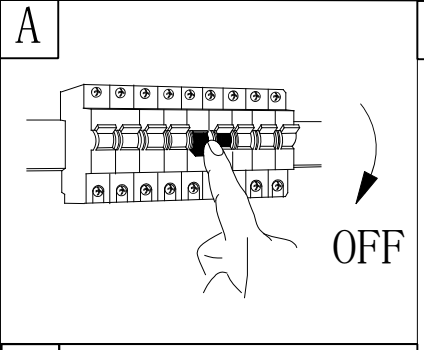

B

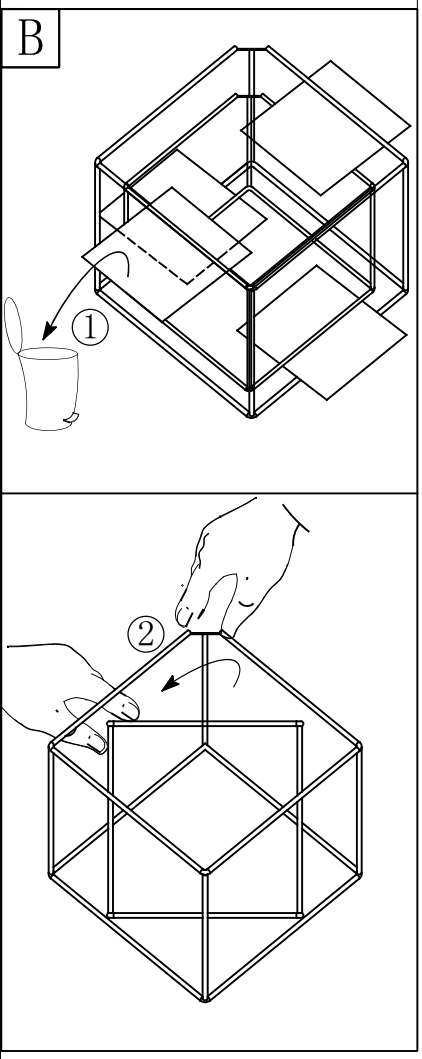

C

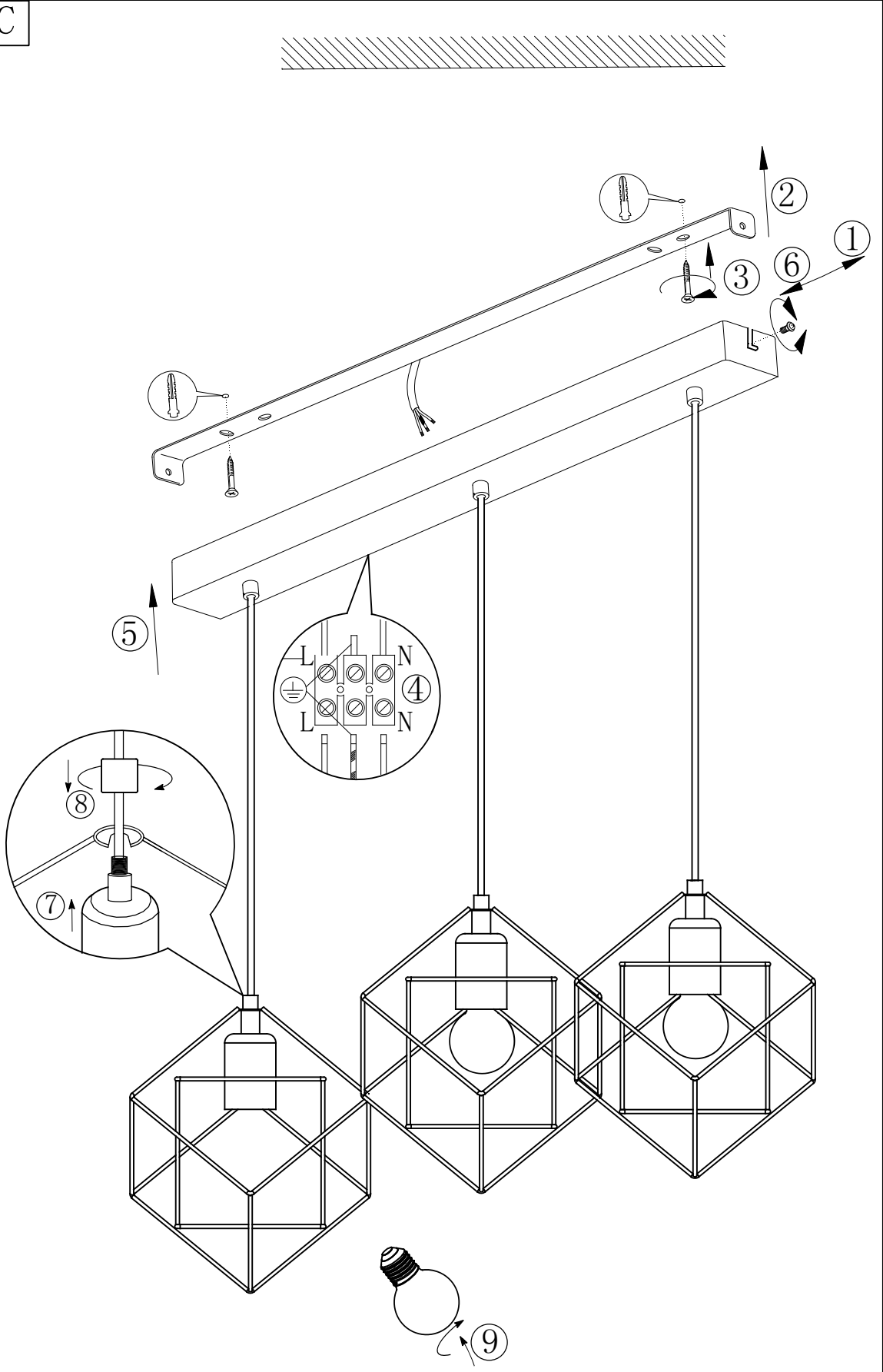

D

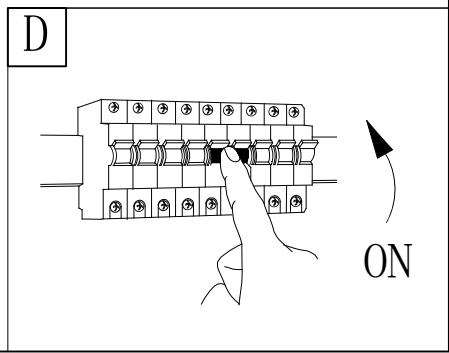

BLA43361

www.eglo.com