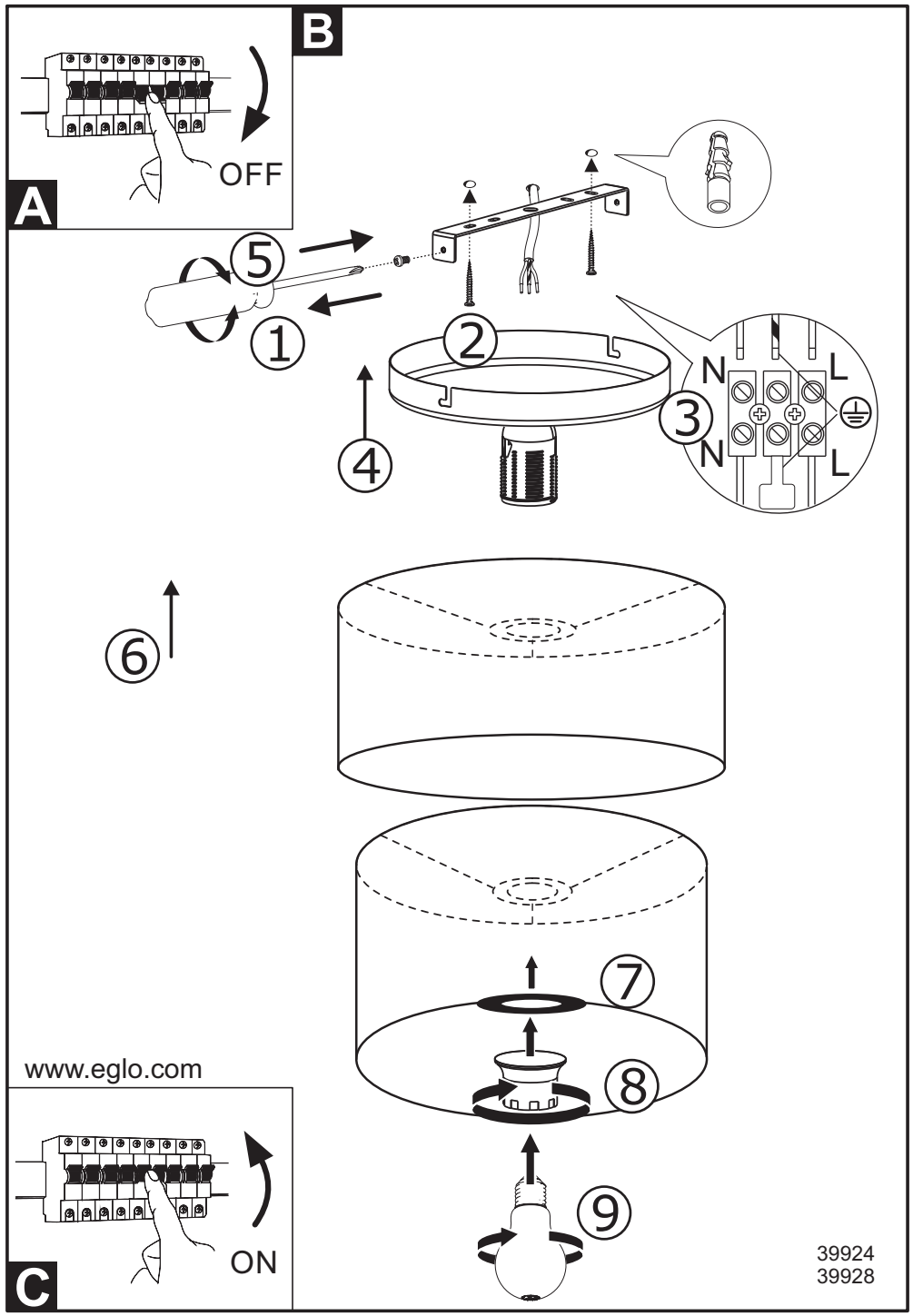
A
OFF
B
1
2
3
4
5
N
L
N
L
6
7
8
9
www.eglo.com
C
ON
39924
39928

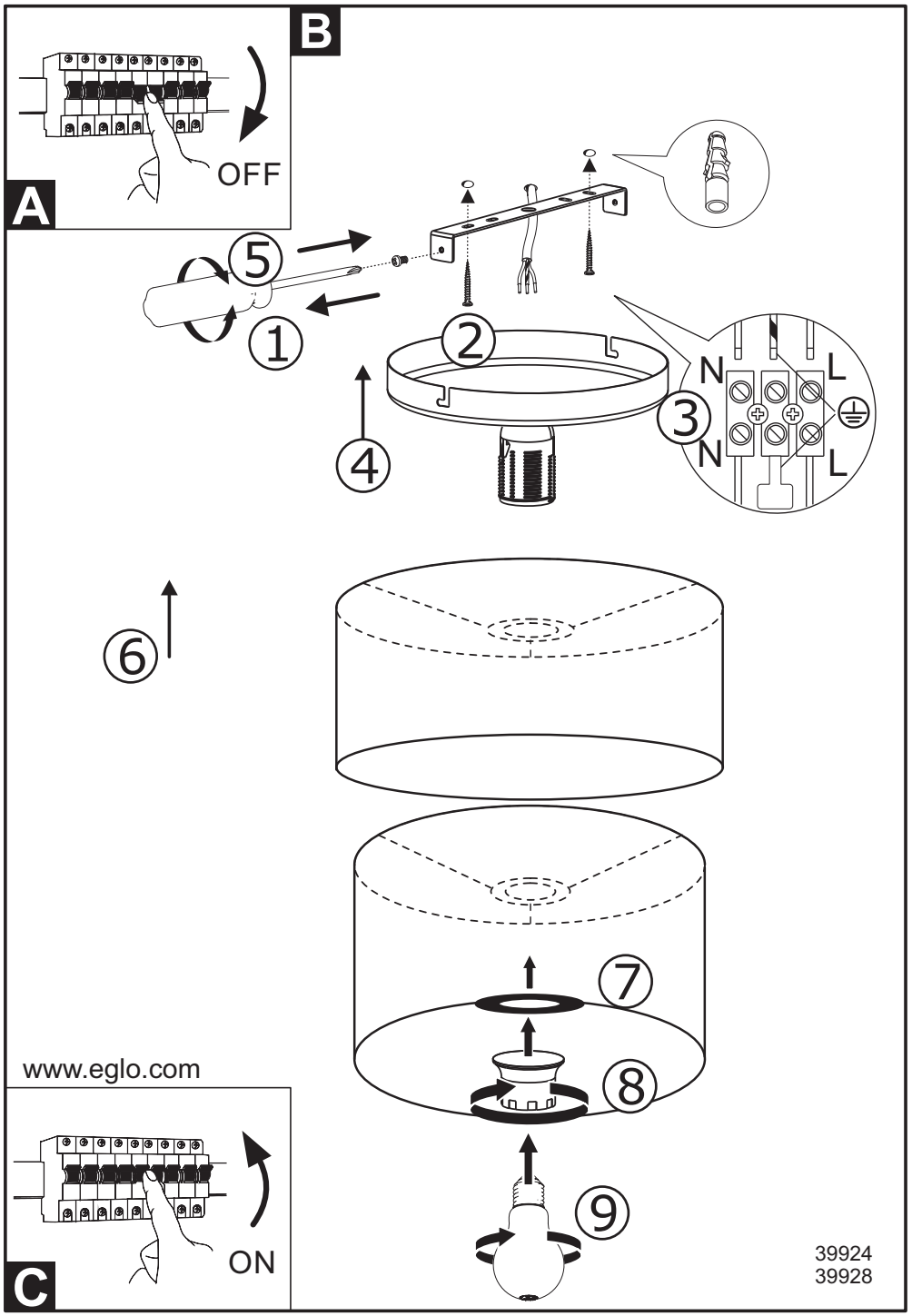
A
OFF
B
1
2
3
4
5
N
L
N
L
6
7
8
9
www.eglo.com
C
ON
39924
39928